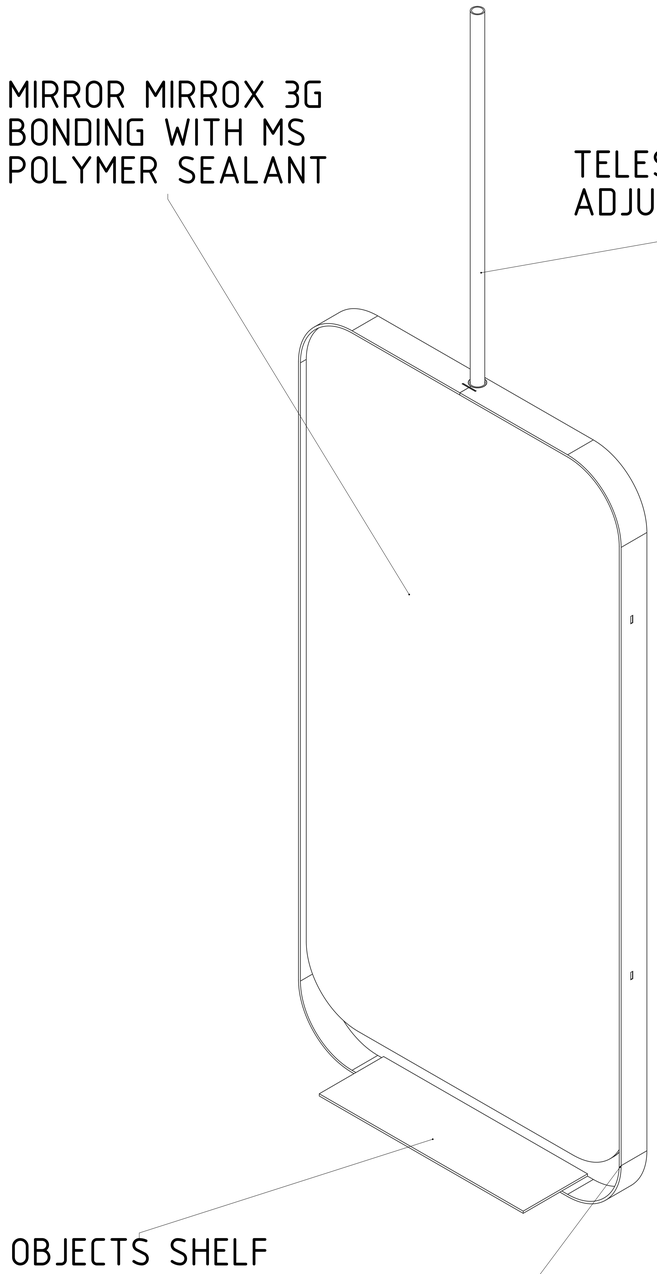

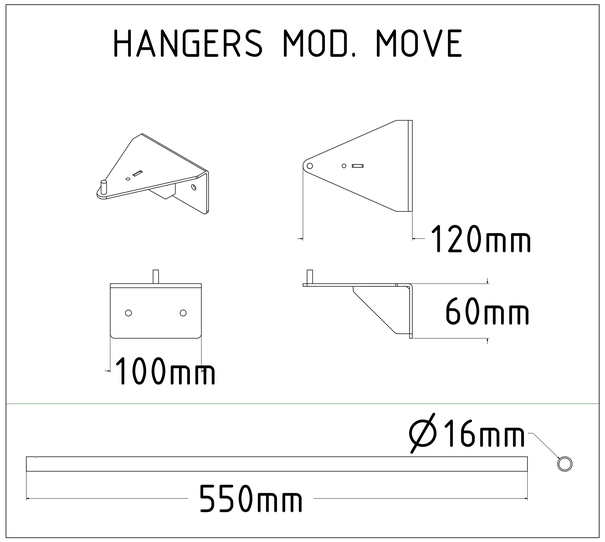

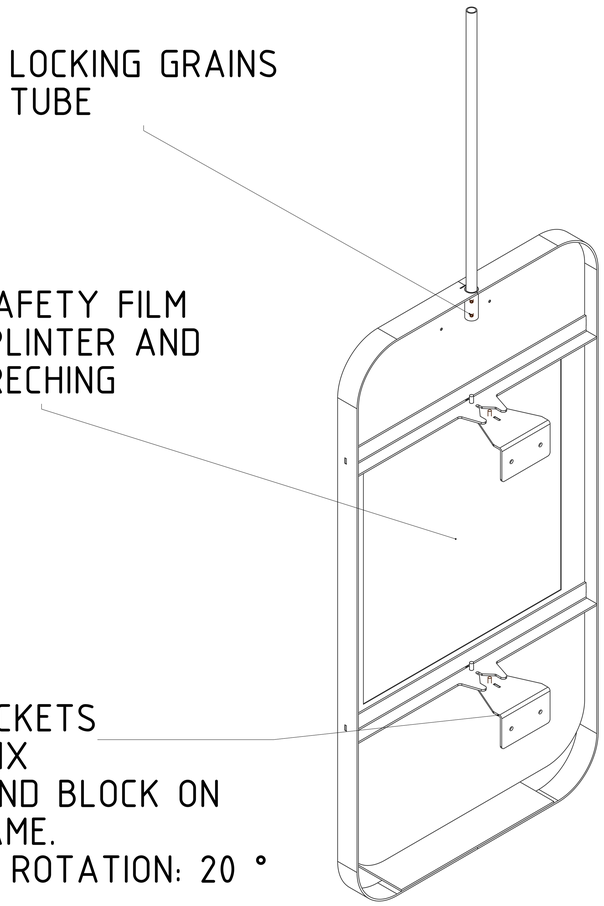

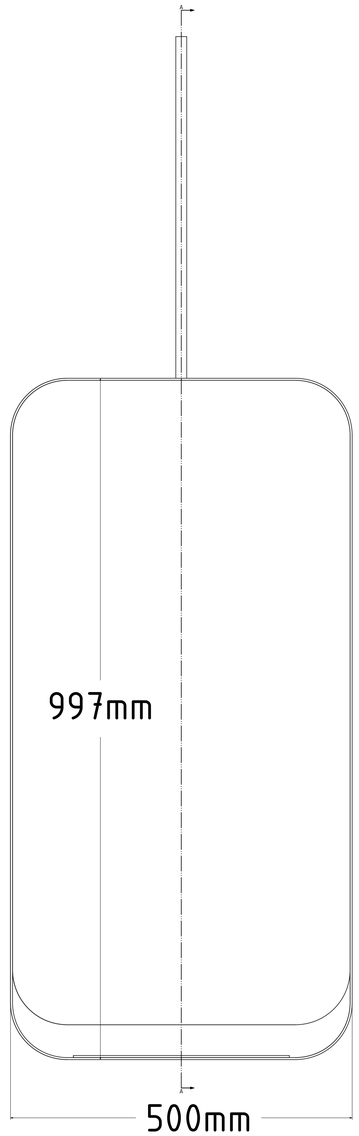

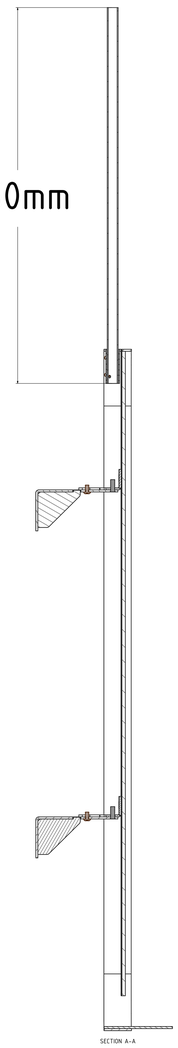

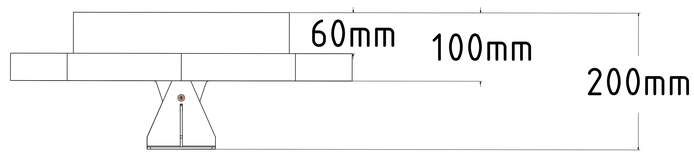

Drawing of property of DDL s.r.l. forbidden to reproduce or disclose without our authorization.

DDL furniture technologies

MIRROR MODEL FORMA MOVE

08/03/2017 08:34:30		Designer: E.Q.
Page 2 of 4	Rev: 1	Code: 10S1015-500X1000/M